ACTUATECH
ACTUATOR TECHNOLOGY

Actuator datasheet

# GS360F10F12 INOX

Modification reserved. Rev.date 01.2015.
No guarantee for accuracy.
Older data sheets are invalid

**COMPANY WITH MANAGEMENT SYSTEM CERTIFIED BY DNV GL**
**= ISO 9001 =**
**= ISO 14001 =**

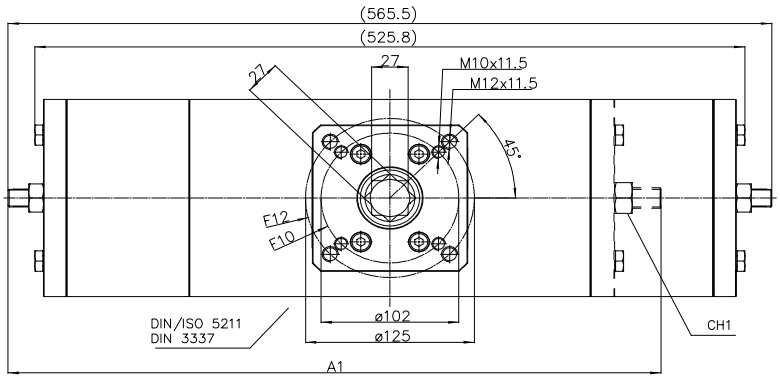


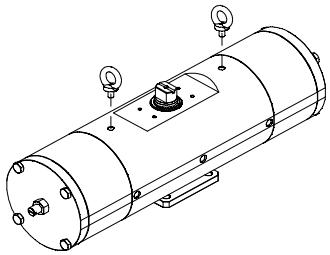

For the lifting use n° 2 eyebolts M10
Lifting points are designed for actuator only

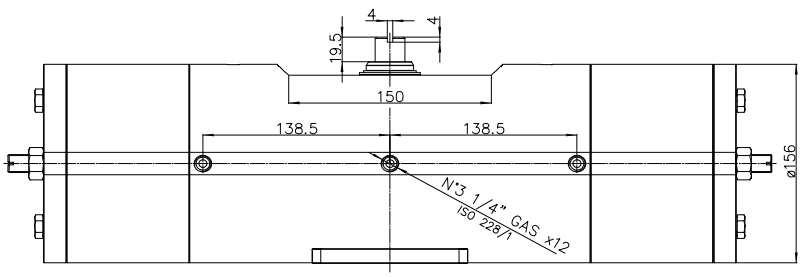


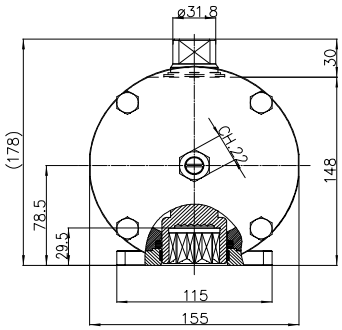


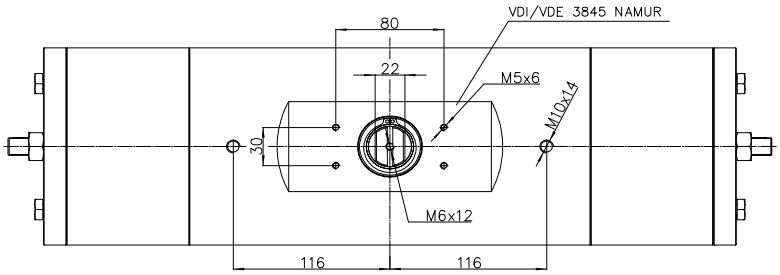


Function

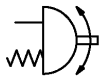

## Spring return Actuators Normally Closed (N.C.) - Output Torque related to rotation angle , in Nm
## ( 0°valve closed 90° valve open )

| Spring Torque | | | | Air pressure supply in bar | | | | | | | | | | | | | | | | | | | | | | | | | | | | | | | | |
|---|---|---|---|---|---|---|---|---|---|---|---|---|---|---|---|---|---|---|---|---|---|---|---|---|---|---|---|---|---|---|---|---|---|---|---|---|
| SIZE | 0° | 50° | 90° | 2,4 | | | 2,8 | | | 3 | | | 3,5 | | | 4,2 | | | 5 | | | 5,6 | | | 6 | | | 7 | | | 8 | | |
| | | | | 0° | 50° | 90° | 0° | 50° | 90° | 0° | 50° | 90° | 0° | 50° | 90° | 0° | 50° | 90° | 0° | 50° | 90° | 0° | 50° | 90° | 0° | 50° | 90° | 0° | 50° | 90° | 0° | 50° | 90° |
| **2,8** | 120.0 | 90.0 | 180.0 | 137.1 | 64.3 | 77.1 | 180.0 | 90.0 | 120.0 | 201.4 | 102.9 | 141.4 | 255.0 | 135.0 | 195.0 | 330.0 | 180.0 | 270.0 | | | | | | | | | | | | | | | |
| **3,5** | 150.0 | 112.5 | 225.0 | | | | | | | 171.4 | 80.4 | 96.4 | 225.0 | 112.5 | 150.0 | 300.0 | 157.5 | 225.0 | 385.7 | 208.9 | 310.7 | 450.0 | 247.5 | 375.0 | | | | | | | | | |
| **4,2** | 180.0 | 135.0 | 270.0 | | | | | | | | | | 195.0 | 90.0 | 105.0 | 270.0 | 135.0 | 180.0 | 355.7 | 186.4 | 265.7 | 420.0 | 225.0 | 330.0 | 462.9 | 250.7 | 372.9 | 570.0 | 315.0 | 480.0 | 677.1 | 379.3 | 587.1 |
| **5,6** | 240.0 | 180.0 | 360.0 | | | | | | | | | | | | | | | | 295.7 | 141.4 | 175.7 | 360.0 | 180.0 | 240.0 | 402.9 | 205.7 | 282.9 | 510.0 | 270.0 | 390.0 | 617.1 | 334.3 | 497.1 |

## Technical Data

| Max Pressure | ** Min Pressure | Rotation | Stroke Adjustment | Screw Stroke Adjustment | *Moving time (sec.) | | Operating temperature (°C) |
|---|---|---|---|---|---|---|---|
| | | | | | Opening | Closing | |
| 8.4 bar | 2.4 bar | 92°<br>-1° +91° | 10° | For 1° drive<br>Need 1/2 turn<br>screw | 1.7 | 1.9 | Standard –20°C +80°C<br>High temperature –20°C +150°C<br>Low temperature –50°C +60°C |

| Weight Kg | Chamber Ø (mm) | Air volume L/cycle | Maximum flange torque values |
|---|---|---|---|
| 45.5 | 115 | 2 | F10 = 500 Nm<br>F12 = 1000 Nm |

| | A1 | CH1 | Weight Kg |
|---|---|---|---|
| Spring return Actuator with spring force 2.8 , is manufactured with only one spring cap and normal end cap (available only in standard version). | 483.5 | 24 | 37.5 |

*The moving time could vary on different operating and installation factors.
****Attention: for "High Temperature" and "Low Temperature" version, the Min Pressure is 3.5 bar.**

**Operating Medium**
The operating medium shall have a dew point equal to – 20 °C or, to be at least, 10 °C below the ambient temperature (ISO 8573-1, Class 3).
The maximum particle size shall not exceed 40 µm (ISO 8573-1, Class 5).


**ACTUATECH S.p.A.**
F.lli Capponi, 126/128 25068 Sarezzo (BS) – ITALY Tel. (+39) 0308908142 Fax (+39) 0308908143
http://www.actuatech.com e-mail: actuatech@actuatech.com