ACTUATECH
ACTUATOR TECHNOLOGY

Actuator datasheet

GS120F05F07 INOX

Modification reserved. Rev.date 01.2015.
No guarantee for accuracy.
Older data sheets are invalid

COMPANY WITH MANAGEMENT SYSTEM CERTIFIED BY DNV GL
= ISO 9001 =
= ISO 14001 =

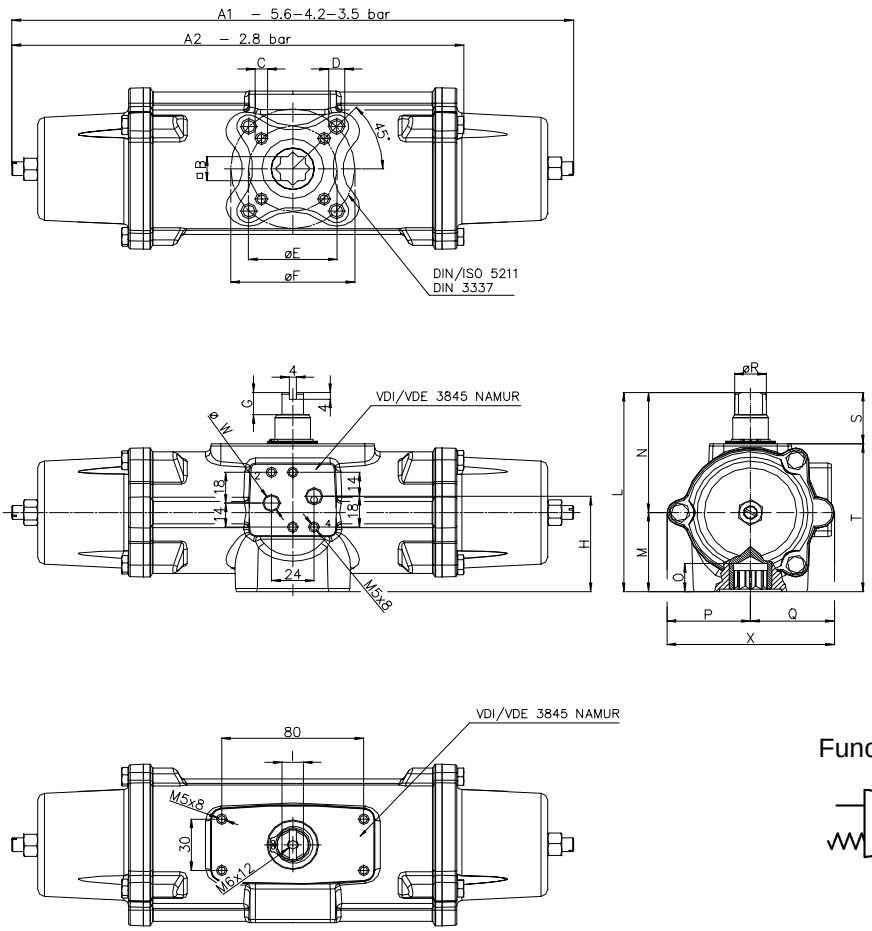

Ref.	Dimensions (mm)
Flange	F05 - F07
C x depth	M6x10
D x depth	M8x14
E	50
F	70
B	17
O	19.3
A1	376.2
G	17
H (bore)	66.1
I	15
L	136.4
M	56.1
N	80.3
P	60.2
Q	56.8
R	22.5
S	30
T	106.4
X	117
W	1/8" GAS
Ancillaries Attachment	AA2

Function

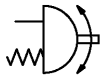

Spring return Actuators Normally Closed (N.C.) - Output Torque related to rotation angle , in Nm
(0°valve closed 90° valve open)

Spring Torque				Air pressure supply in bar																												
				2,4			2,8			3			3,5			4,2			5			5,6			6			7			8		
SIZE	0°	50°	90°	0°	50°	90°	0°	50°	90°	0°	50°	90°	0°	50°	90°	0°	50°	90°	0°	50°	90°	0°	50°	90°	0°	50°	90°	0°	50°	90°	0°	50°	90°
2,8	40.0	30.0	60,0	45.7	21.4	25.7	60.0	30.0	40.0	67.1	34.3	47.1	85.0	45.0	65.0	110.0	60.0	90.0															
3,5	50,0	37.5	75.0							57.1	26.8	32.1	75.0	37.5	50.0	100.0	52.5	75.0	128.6	69.6	103.6	150.0	82.5	125.0									
4,2	60.0	45.0	90.0										65.0	30.0	35.0	90.0	45.0	60.0	118.6	62.1	88.6	140.0	75.0	110.0	154.3	83.6	124.3	190.0	105.0	160.0	225.7	126.4	195.7
5,6	80.0	60,0	120.0																98.6	47.1	58.6	120.0	60.0	80.0	134.3	68.6	94.3	170.0	90.0	130.0	205.7	111.4	165.7

Technical Data

Max Pressure	** Min Pressure	Rotation	Stroke Adjustment	Screw Stroke Adjustment	*Moving time (sec.)		Operating temperature (°C)
					Opening	Closing	
8.4 bar	2.4 bar	92° -1° +91°	-	-	0.79	0.92	Standard –20°C +80°C

Weight Kg	Chamber Ø (mm)	Air volume L/cycle	Maximum flange torque values
7.6	80	0.7	F05 = 125 Nm F07 = 250 Nm

	A2	Weight Kg
Spring return Actuator with spring force 2.8 , is manufactured with only one spring cap and normal end cap.	311.5	6.6

*The moving time could vary on different operating and installation factors.

Operating Medium
The operating medium shall have a dew point equal to – 20 °C or, to be at least, 10 °C below the ambient temperature (ISO 8573-1, Class 3).
The maximum particle size shall not exceed 40 µm (ISO 8573-1, Class 5).

ACTUATECH S.p.A.
F.lli Capponi, 126/128 25068 Sarezzo (BS) – ITALY Tel. (+39) 0308908142 Fax (+39) 0308908143
http://www.actuatech.com e-mail: actuatech@actuatech.com