ACTUATECH
ACTUATOR TECHNOLOGY

Actuator datasheet

GS60F05F07 INOX

Modification reserved. Rev.date 01.2015.
No guarantee for accuracy.
Older data sheets are invalid

COMPANY WITH MANAGEMENT SYSTEM CERTIFIED BY DNV GL
= ISO 9001 =
= ISO 14001 =

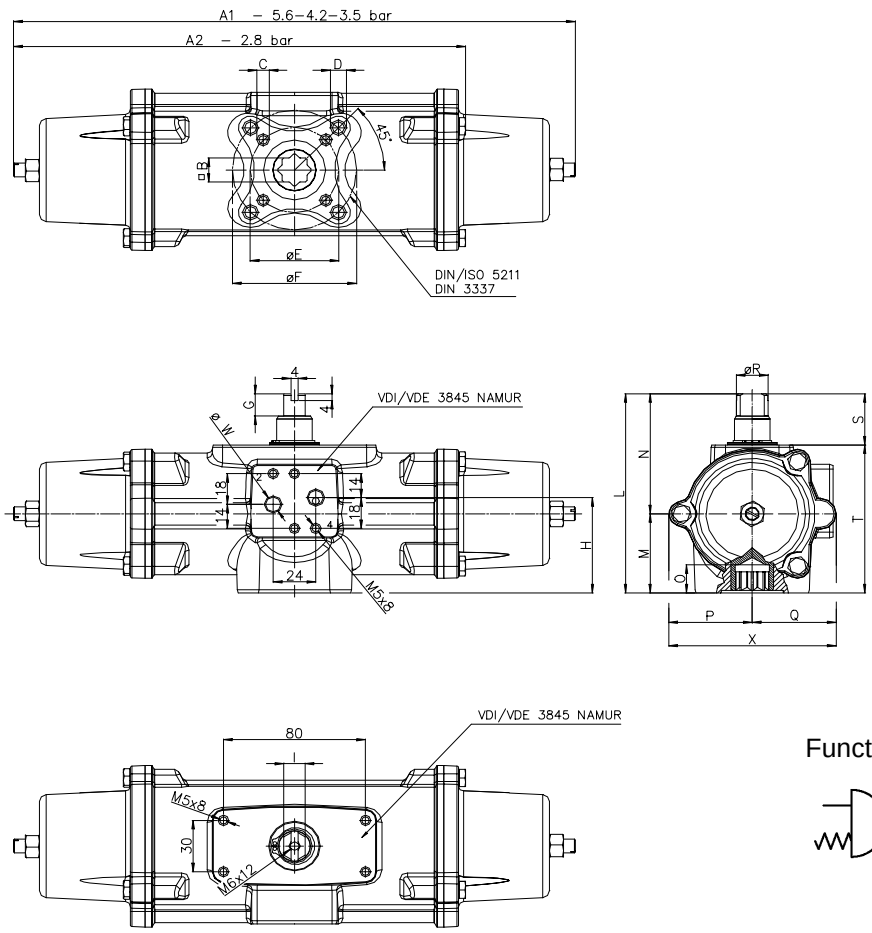

Ref.	Dimensions (mm)
Flange	F05 - F07
C x depth	M6x10
D x depth	M8x14
E	50
F	70
B	14
O	16.3
A1	316.5
G	13
H (bore)	55.7
I	12
L	116.4
M	46.2
N	70.2
P	47
Q	47.4
R	18
S	30
T	86.4
X	94.4
W	1/8" GAS
Ancillaries Attachment	AA2

Function

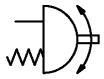

Spring return Actuators Normally Closed (N.C.) - Output Torque related to rotation angle , in Nm
(0°valve closed 90° valve open)

Spring Torque				Air pressure supply in bar																																
SIZE	0°	50°	90°	2,4			2,8			3			3,5			4,2			5			5,6			6			7			8		
				0°	50°	90°	0°	50°	90°	0°	50°	90°	0°	50°	90°	0°	50°	90°	0°	50°	90°	0°	50°	90°	0°	50°	90°	0°	50°	90°	0°	50°	90°
2,8	20.0	15,0	30,0	22.9	10.7	12.9	30.0	15.0	20.0	33.6	17.1	23.6	42.5	22.5	32.5	55.0	30.0	45.0															
3,5	25,0	18.8	37.5							28.6	13.4	16.1	37.5	18.8	25.0	50,0	26.3	37.5	64.3	34.9	51.8	75,0	41.4	62.5									
4,2	30,0	22.5	45,0										32.5	15.0	17.5	45.0	22.5	30.0	59.3	31.1	44.3	70.0	37.5	55.0	77.1	41.8	62.1	95.0	52.5	80.0	112.9	63.2	97.9
5,6	40,0	30,0	60,0																49.3	23.6	29.3	60.0	30.0	40.0	67.1	34.3	47.1	85.0	45.0	65.0	102.9	55.7	82.9

Technical Data

Max Pressure	** Min Pressure	Rotation	Stroke Adjustment	Screw Stroke Adjustment	*Moving time (sec.)		Operating temperature (°C)
					Opening	Closing	
8.4 bar	2.4 bar	92° -1° +91°	-	-	0.47	0.55	Standard –20°C +80°C

Weight Kg	Chamber Ø (mm)	Air volume L/cycle	Maximum flange torque values
4.5	63	0.33	F05 = 125 Nm F07 = 250 Nm

	A2	Weight Kg
Spring return Actuator with spring force 2.8 , is manufactured with only one spring cap and normal end cap.	254.7	3.9

*The moving time could vary on different operating and installation factors.

Operating Medium
The operating medium shall have a dew point equal to – 20 °C or, to be at least, 10 °C below the ambient temperature (ISO 8573-1, Class 3).
The maximum particle size shall not exceed 40 µm (ISO 8573-1, Class 5).

ACTUATECH S.p.A.
F.lli Capponi, 126/128 25068 Sarezzo (BS) – ITALY Tel. (+39) 0308908142 Fax (+39) 0308908143
http://www.actuatech.com e-mail: actuatech@actuatech.com