ACTUATECH
ACTUATOR TECHNOLOGY

Actuator datasheet

GS15F03INOX

Modification reserved. Rev.date 01.2015.
No guarantee for accuracy.
Older data sheets are invalid

COMPANY WITH MANAGEMENT SYSTEM CERTIFIED BY DNV GL
= ISO 9001 =
= ISO 14001 =

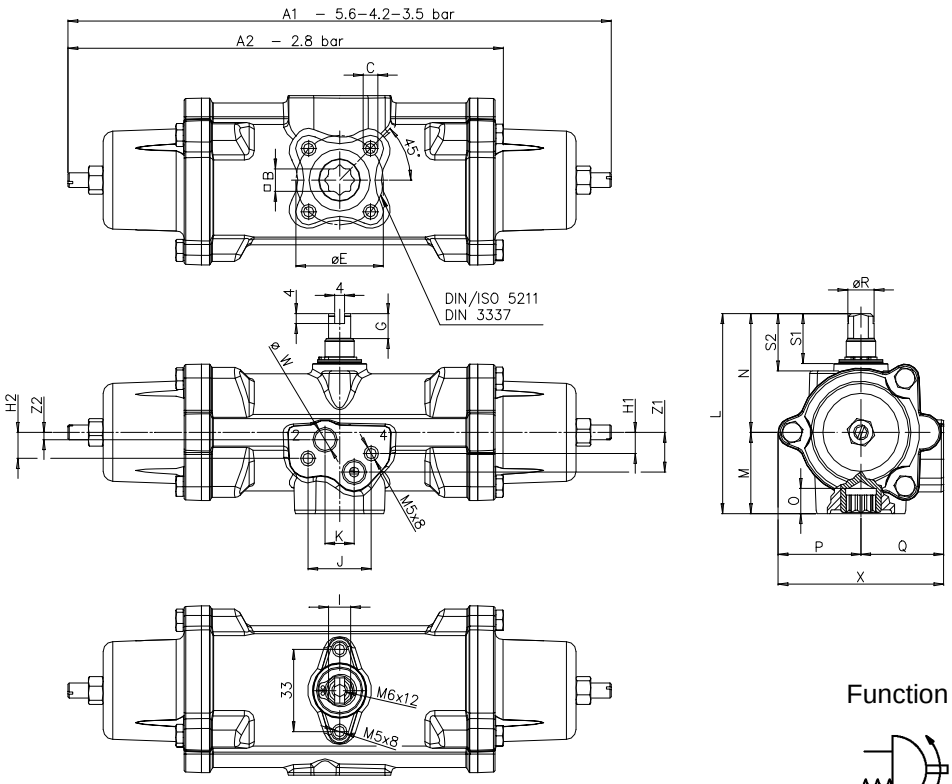

Function

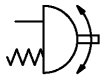

Ref.	Dimensions (mm)
Flange	F03
C x depth	M5x8
E	36
B	9
O	10.2
A1	224
G	10
H 1	8.5
H 2	10.5
I	9
j	26
K	12
L	80.4
M	32.7
N	47.7
P	34
Q	34
R	10.9
S 1	20
S 2	23
X	68
W	1/8" GAS
Z 1	16
Z2	3

Spring return Actuators Normally Closed (N.C.) - Output Torque related to rotation angle , in Nm
(0°valve closed 90° valve open)

Spring Torque				Air pressure supply in bar																																
				2,4			2,8			3			3,5			4,2			5			5,6			6			7			8		
SIZE	0°	50°	90°	0°	50°	90°	0°	50°	90°	0°	50°	90°	0°	50°	90°	0°	50°	90°	0°	50°	90°	0°	50°	90°	0°	50°	90°	0°	50°	90°	0°	50°	90°
2,8	5.0	3.7	7.5	5.7	2.6	3.2	7.5	3.7	5.0	8.4	4.2	5.9	10.6	5.6	8.1	13.8	7.4	11.3															
3,5	6.3	4.7	9.4							7.2	3.3	4.0	9.4	4.7	6.3	12.6	6.5	9.4	16.1	8.7	13.0	18.8	10.3	15.7									
4,2	7.5	5.6	11.3										8.2	3.7	4.4	11.3	5.6	7.5	14.9	7.7	11.1	17.6	9.3	13.8	19.4	10.4	15.6	23.8	13.1	20.0	28.3	15.7	24.5
5,6	10.0	7.5	15.0																12.3	5.9	7.3	15.0	7.5	10.0	16.8	8.6	11.8	21.3	11.3	16.3	25.7	13.9	20.7

Technical Data

Max Pressure	** Min Pressure	Rotation	Stroke Adjustment	Screw Stroke Adjustment	*Moving time (sec.)		Operating temperature (°C)
					Opening	Closing	
8.4 bar	2.4 bar	92° -1° +91°	-	-	0.11	0.13	Standard –20°C +80°C

Weight Kg	Chamber Ø (mm)	Air volume L/cycle	Maximum flange torque values
1.6	40	0.086	F03 = 32 Nm

	A2	Weight Kg
Spring return Actuator with spring force 2.8 , is manufactured with only one spring cap and normal end cap.	179	1.4

*The moving time could vary on different operating and installation factors.
**Attention: for "High Temperature" and "Low Temperature" version, the Min Pressure is 3.5 bar.

Operating Medium
The operating medium shall have a dew point equal to – 20 °C or, to be at least, 10 °C below the ambient temperature (ISO 8573-1, Class 3).

ACTUATECH S.p.A.
F.lli Capponi, 126/128 25068 Sarezzo (BS) – ITALY Tel. (+39) 0308908142 Fax (+39) 0308908143
http://www.actuatech.com e-mail: actuatech@actuatech.com