ACTUATECH
ACTUATOR TECHNOLOGY

Actuator datasheet

GD180F07F10

Modification reserved. Rev.date 11.2025.
No guarantee for accuracy.
Older data sheets are invalid

COMPANY WITH MANAGEMENT SYSTEM CERTIFIED BY DNV GL
= ISO 9001 =
= ISO 14001 =

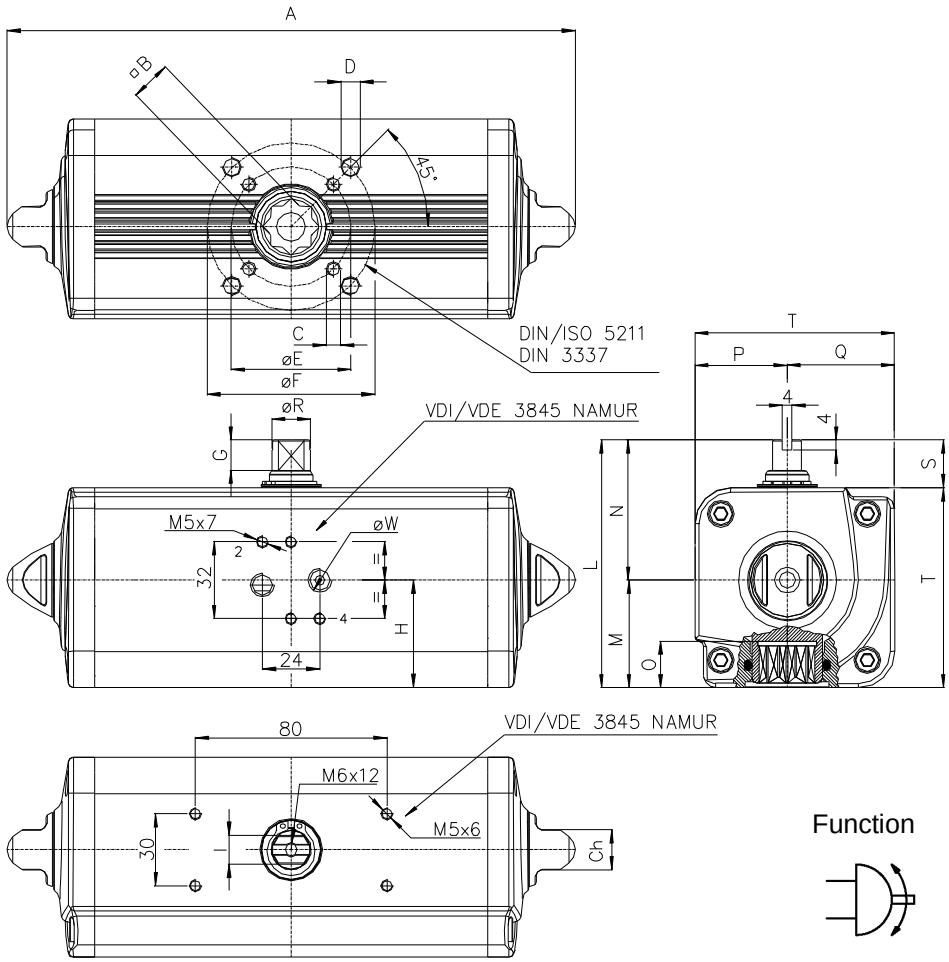

Function

Ref.	Dimensions (mm)
Flange	F07 - F10
C x depth	M8x12
D x depth	M10x15
E	70
F	102
B	22
O	24.8
A	289.9
G	16
H (bore)	56.5
I	15
L	137.5
M	56.5
N	81
P	51
Q	56.5
R	20.2
S	30
T	107.5
W	1/8" GAS
Ch	22
Ancillaries Attachment	AA2

Double Acting Actuators - Output Torque related to rotation angle , in Nm
(0°valve closed 90°valve open)

ROTATION ANGLE	Air pressure supply in bar							
	2,5	3	4	5	5,6	6	7	8
0°	80.4	96.4	128.6	160.7	180	192.9	225	257.1
50°	40.2	48.2	64.3	80.4	90	96.4	112.5	128.6
90°	60.3	72.3	96.4	120.5	135	144.6	168.8	192.9

Technical Data

Max Pressure	** Min Pressure	Rotation	Stroke Adjustment	Screw Stroke Adjustment	*Moving time (sec.)		Operating temperature (°C)
					Opening	Closing	
8.4 bar	1 bar	92° -1° +91°	10 °	For 1° drive Need 1/3 turn screw	0.20	0.21	Standard –20°C +80°C High temperature –20°C +150°C Low temperature –50°C +60°C

Weight Kg	Chamber Ø (mm)	Air volume L/cycle	Maximum flange torque values
4.6	72	0.96	F07 = 250 Nm F10 = 500 Nm

****Attention:**
for "High Temperature" and "Low Temperature" version, the Min Pressure is 3 bar.

*The moving time could vary on different operating and installation factors .

Operating Medium
The operating medium shall have a dew point equal to – 20 °C or, to be at least, 10 °C below the ambient temperature (ISO 8573-1, Class 3).
The maximum particle size shall not exceed 40 µm (ISO 8573-1, Class 5).

ACTUATECH S.p.A.
Via San Lorenzo, 70 - 25069 Villa Carcina (BS) – ITALY Tel. (+39) 0308908142 Fax (+39) 0308908143
http://www.actuatech.com e-mail: actuatech@actuatech.com