ACTUATECH
ACTUATOR TECHNOLOGY

Actuator datasheet

GS1920F16 100°

Modification reserved. Rev.date 05.2021.
No guarantee for accuracy.
Older data sheets are invalid

COMPANY WITH MANAGEMENT SYSTEM CERTIFIED BY DNV GL
= ISO 9001 =
= ISO 14001 =

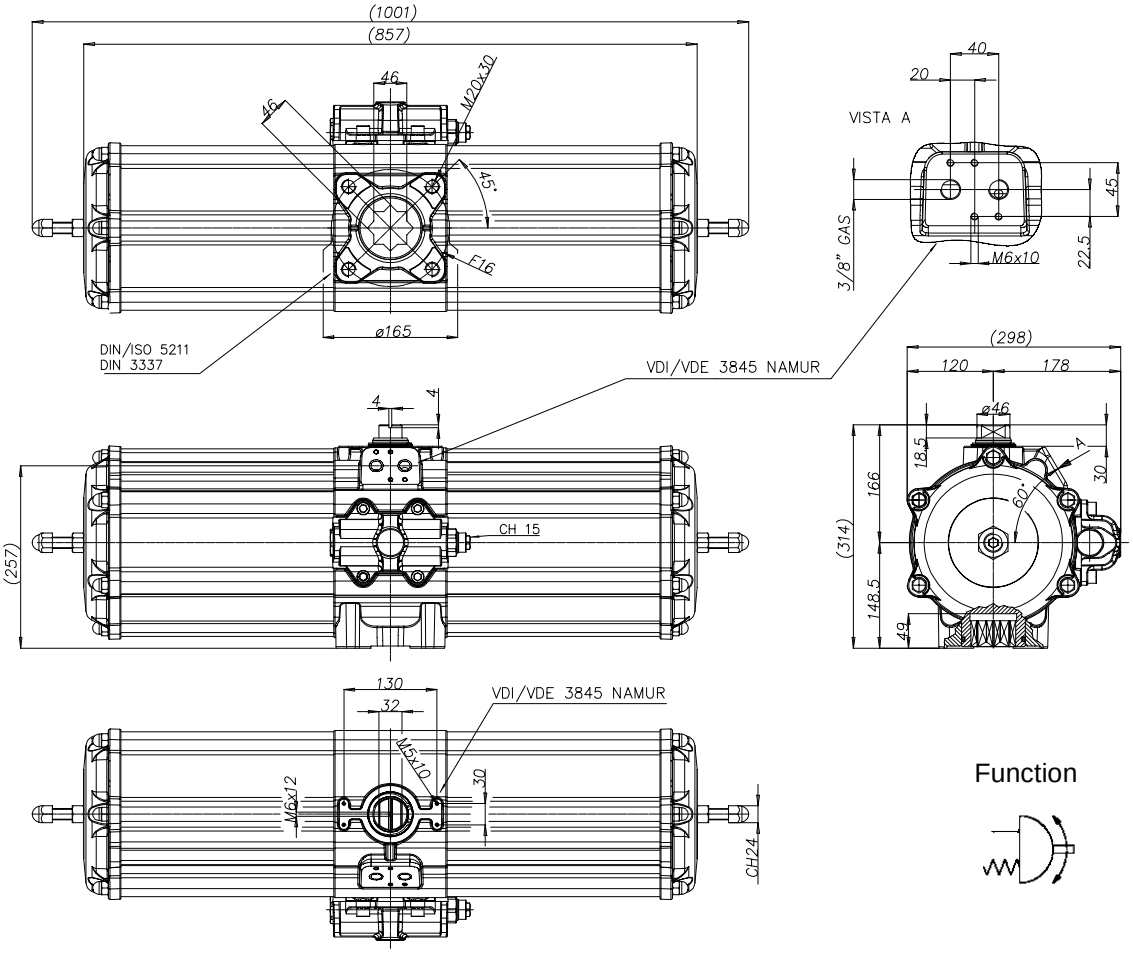

Function

Spring return Actuators Normally Closed (N.C.)- Output Torque related to rotation angle , in Nm
(0°valve closed 90° valve open)

Spring Torque				Air pressure supply in bar																														
SIZE	0°	50°	90°	2,4			2,8			3			3,5			4,2			5			5,6			6			7			8		
				0°	50°	90°	0°	50°	90°	0°	50°	90°	0°	50°	90°	0°	50°	90°	0°	50°	90°	0°	50°	90°	0°	50°	90°	0°	50°	90°	0°	50°	90°
2,8	640	480	960	731	343	411	960	480	640	1074	549	754	1360	720	1040	1760	960	1440																
3,5	800	600	1200							914	429	514	1200	600	800	1600	840	1200	2057	1114	1657	2400	1320	2000									
4,2	960	720	1440										1040	480	560	1440	720	960	1897	994	1417	2240	1200	1760	2469	1337	1989	3040	1680	2560	3611	2023	3131
5,6	1280	960	1920																1577	754	937	1920	960	1280	2149	1097	1509	2720	1440	2080	3291	1783	2651

Technical Data

Max Pressure	** Min Pressure	Rotation	Stroke Adjustment	Screw Stroke Adjustment	*Moving time (sec.)		Operating temperature (°C)
					Opening	Closing	
8.4 bar	2.4 bar	100° -5° +95°	10 °	For 1° drive Need 5/4 turn screw	7	8	Standard –20°C +80°C High temperature –20°C +150°C Low temperature –50°C +60°C

Weight Kg	Chamber Ø (mm)	Air volume L/cycle	Maximum flange torque values
70	208	13.26	F16 = 4000 Nm

*The moving time could vary on different operating and installation factors.
****Attention: "Low Temperature" version is not available with 2.8 spring torque size and the Min Pressure is 3.5 bar.**

Operating Medium
The operating medium shall have a dew point equal to– 20 °C or, to be at least, 10 °C below the ambient temperature (ISO 85731, Class 3).The maximum particle size shall not exceed 40 µm (ISO 8573-1, Class 5).

ACTUATECH S.p.A.
Via San Lorenzo, 70 - 25069 Villa Carcina (BS) – ITALY Tel. (+39) 0308908142 Fax (+39) 0308908143
http://www.actuatech.com e-mail: actuatech@actuatech.com