ACTUATECH
ACTUATOR TECHNOLOGY

Actuator datasheet

# GS480F10F12

Modification reserved. Rev.date 05.2021.
No guarantee for accuracy.
Older data sheets are invalid

COMPANY WITH MANAGEMENT SYSTEM CERTIFIED BY DNV GL
= ISO 9001 =
= ISO 14001 =

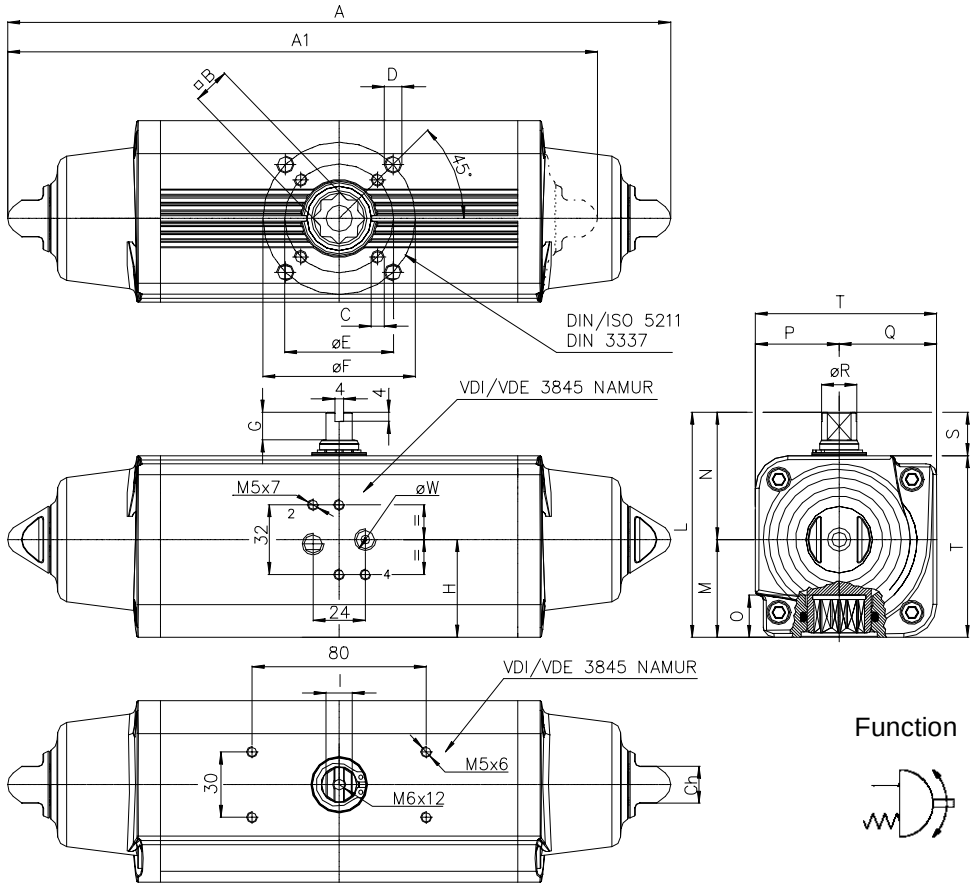


Function



| Ref. | Dimensions (mm) |
|---|---|
| Flange | F10 - F12 |
| C x depth | M10x15 |
| D x depth | M12x18 |
| E | 102 |
| F | 125 |
| B | 36 |
| O | 38.5 |
| A | 648.2 |
| G | 19.5 |
| H (bore) | 78 |
| I | 24 |
| L | 198 |
| M | 93.5 |
| N | 104.5 |
| P | 74.5 |
| Q | 93.5 |
| R | 36.5 |
| S | 30 |
| T | 168 |
| W | 1/4" GAS |
| Ch | 27 |
| Ancillaries Attachment | AA2 |

**Spring return Actuators Normally Closed (N.C.)- Output Torque related to rotation angle , in Nm**
**( 0°valve closed 90° valve open )**

| Spring Torque | | | | Air pressure supply in bar | | | | | | | | | | | | | | | | | | | | | | | | | | | | | | | | |
|---|---|---|---|---|---|---|---|---|---|---|---|---|---|---|---|---|---|---|---|---|---|---|---|---|---|---|---|---|---|---|---|---|---|---|---|---|
| SIZE | 0° | 50° | 90° | 2,4 | | | 2,8 | | | 3 | | | 3,5 | | | 4,2 | | | 5 | | | 5,6 | | | 6 | | | 7 | | | 8 | | |
| | | | | 0° | 50° | 90° | 0° | 50° | 90° | 0° | 50° | 90° | 0° | 50° | 90° | 0° | 50° | 90° | 0° | 50° | 90° | 0° | 50° | 90° | 0° | 50° | 90° | 0° | 50° | 90° | 0° | 50° | 90° |
| 2,8 | 160,0 | 120,0 | 240,0 | 182,9 | 85,7 | 102,9 | 240,0 | 120,0 | 160,0 | 268,6 | 137,1 | 188,6 | 340,0 | 180,0 | 260,0 | 440,0 | 240,0 | 360,0 | | | | | | | | | | | | | | | |
| 3,5 | 200,0 | 150,0 | 300,0 | | | | | | | 228,6 | 107,1 | 128,6 | 300,0 | 150,0 | 200,0 | 400,0 | 210,0 | 300,0 | 514,3 | 278,6 | 414,3 | 600,0 | 330,0 | 500,0 | | | | | | | | | |
| 4,2 | 240,0 | 180,0 | 360,0 | | | | | | | | | | 260,0 | 120,0 | 140,0 | 360,0 | 180,0 | 240,0 | 474,3 | 248,6 | 354,3 | 560,0 | 300,0 | 440,0 | 617,1 | 334,3 | 497,1 | 760,0 | 420,0 | 640,0 | 902,9 | 505,7 | 782,9 |
| 5,6 | 320,0 | 240,0 | 480,0 | | | | | | | | | | | | | | | | 394,3 | 188,6 | 234,3 | 480,0 | 240,0 | 320,0 | 537,1 | 274,3 | 377,1 | 680,0 | 360,0 | 520,0 | 822,9 | 445,7 | 662,9 |

## Technical Data

| Max Pressure | ** Min Pressure | Rotation | Stroke Adjustment | Screw Stroke Adjustment | *Moving time (sec.) | | Operating temperature (°C) |
|---|---|---|---|---|---|---|---|
| | | | | | Opening | Closing | |
| 8.4 bar | 2.4 bar | 92°<br>-1° +91° | 10 ° | For 1° drive Need 1/2 turn screw | 1.8 | 2 | Standard –20°C +80°C<br>High temperature –20°C +150°C<br>Low temperature –50°C +60°C |

| Weight Kg | Chamber Ø (mm) | Air volume L/cycle | Maximum flange torque values |
|---|---|---|---|
| 22.7 | 125 | 2.62 | F10 = 500 Nm<br>F12 = 1000 Nm |

| Spring return Actuator with spring force 2.8 , is manufactured with only one spring cap and normal end cap (available only in standard version). | A1 | Weight Kg |
|---|---|---|
| | 563.8 | 19.3 |

*The moving time could vary on different operating and installation factors.
**Attention: for “High Temperature” and “Low Temperature” version, the Min Pressure is 3.5 bar.

**Operating Medium**
The operating medium shall have a dew point equal to– 20 °C or, to be at least, 10 °C below the ambient temperature (ISO 85731, Class 3).
The maximum particle size shall not exceed 40 µm (ISO 8573-1, Class 5).


**ACTUATECH S.p.A.**
Via San Lorenzo, 70 - 25069 Villa Carcina (BS) – ITALY Tel. (+39) 0308908142 Fax (+39) 0308908143
http://www.actuatech.com e-mail: actuatech@actuatech.com