ACTUATECH
ACTUATOR TECHNOLOGY

Actuator datasheet

GS480F12F16 INOX

Modification reserved. Rev.date 01.2015.
No guarantee for accuracy.
Older data sheets are invalid

COMPANY WITH MANAGEMENT SYSTEM CERTIFIED BY DNV GL
= ISO 9001 =
= ISO 14001 =

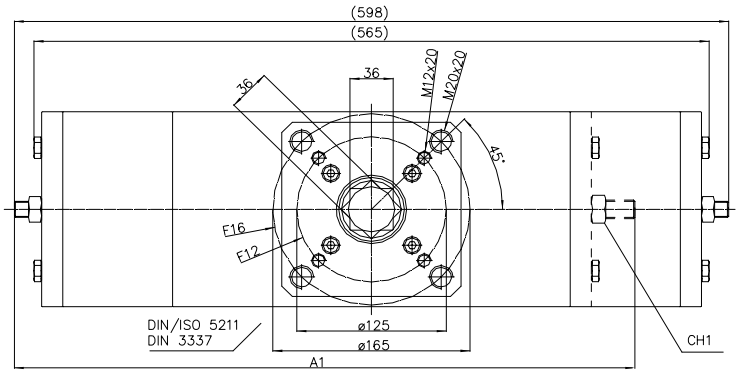

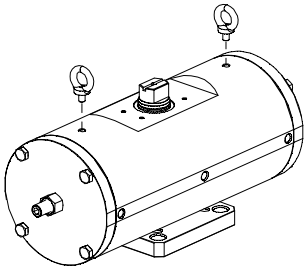

For the lifting use n° 2 eyebolts M10
Lifting point are designed for actuator

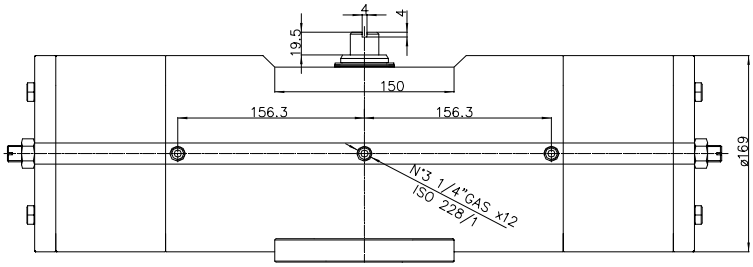

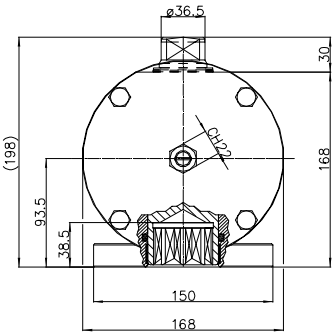

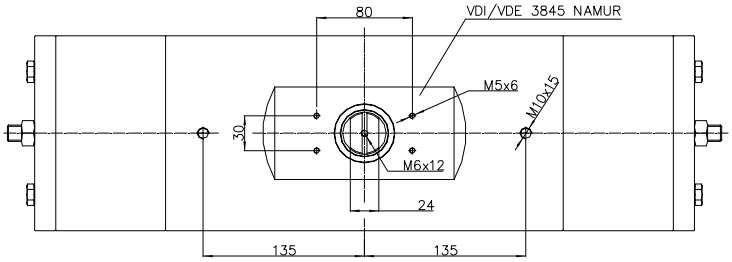

Function

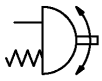

Spring return Actuators Normally Closed (N.C.) - Output Torque related to rotation angle , in Nm
(0°valve closed 90° valve open)

Spring Torque				Air pressure supply in bar																																
SIZE	0°	50°	90°	2,4			2,8			3			3,5			4,2			5			5,6			6			7			8		
				0°	50°	90°	0°	50°	90°	0°	50°	90°	0°	50°	90°	0°	50°	90°	0°	50°	90°	0°	50°	90°	0°	50°	90°	0°	50°	90°	0°	50°	90°
2,8	160,0	120,0	240,0	182,9	85,7	102,9	240,0	120,0	160,0	268,6	137,1	188,6	340,0	180,0	260,0	440,0	240,0	360,0															
3,5	200,0	150,0	300,0							228,6	107,1	128,6	300,0	150,0	200,0	400,0	210,0	300,0	514,3	278,6	414,3	600,0	330,0	500,0									
4,2	240,0	180,0	360,0										260,0	120,0	140,0	360,0	180,0	240,0	474,3	248,6	354,3	560,0	300,0	440,0	617,1	334,3	497,1	760,0	420,0	640,0	902,9	505,7	782,9
5,6	320,0	240,0	480,0																394,3	188,6	234,3	480,0	240,0	320,0	537,1	274,3	377,1	680,0	360,0	520,0	822,9	445,7	662,9

Technical Data

Max Pressure	** Min Pressure	Rotation	Stroke Adjustment	Screw Stroke Adjustment	*Moving time (sec.)		Operating temperature (°C)
					Opening	Closing	
8.4 bar	2.4 bar	92° -1° +91°	10°	For 1° drive Need 1/2 turn screw	1.8	2	Standard –20°C +80°C High temperature –20°C +150°C Low temperature –50°C +60°C

Weight Kg	Chamber Ø (mm)	Air volume L/cycle	Maximum flange torque values
60	125	2.8	F12 = 1000 Nm F16 = 4000 Nm

	A1	CH1	Weight Kg
Spring return Actuator with spring force 2.8 , is manufactured with only one spring cap and normal end cap (available only in standard version).	519	24	51

*The moving time could vary on different operating and installation factors.
****Attention: for "High Temperature" and "Low Temperature" version, the Min Pressure is 3.5 bar.**

Operating Medium
The operating medium shall have a dew point equal to – 20 °C or, to be at least, 10 °C below the ambient temperature (ISO 8573-1, Class 3).
The maximum particle size shall not exceed 40 µm (ISO 8573-1, Class 5).

ACTUATECH S.p.A.
F.lli Capponi, 126/128 25068 Sarezzo (BS) – ITALY Tel. (+39) 0308908142 Fax (+39) 0308908143
http://www.actuatech.com e-mail: actuatech@actuatech.com