ACTUATECH
ACTUATOR TECHNOLOGY

Actuator datasheet

GS720F12 INOX

Modification reserved. Rev.date 01.2015.
No guarantee for accuracy.
Older data sheets are invalid

COMPANY WITH MANAGEMENT SYSTEM CERTIFIED BY DNV GL
= ISO 9001 =
= ISO 14001 =

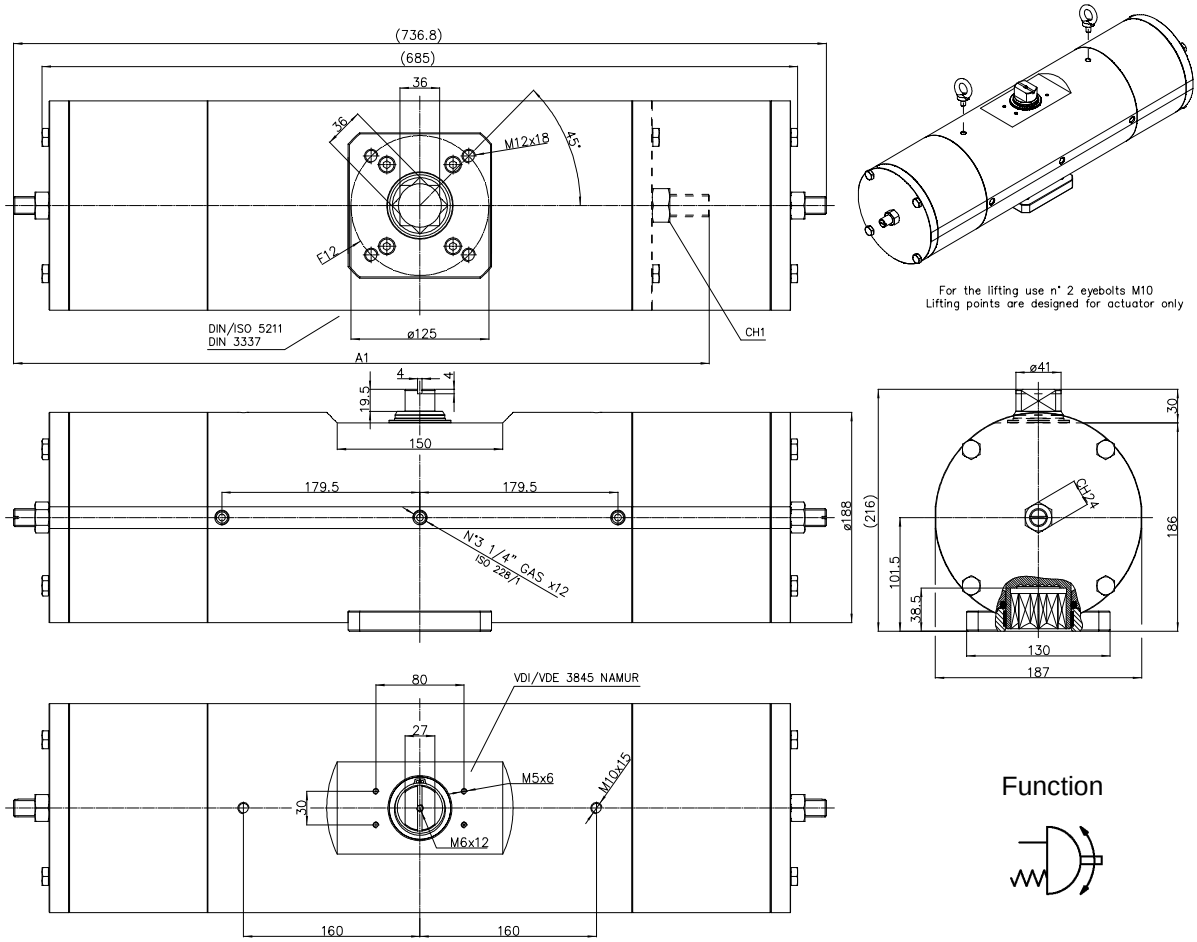

Function

Spring return Actuators Normally Closed (N.C.) - Output Torque related to rotation angle , in Nm
(0°valve closed 90° valve open)

Spring Torque				Air pressure supply in bar																																
SIZE	0°	50°	90°	2,4			2,8			3			3,5			4,2			5			5,6			6			7			8		
				0°	50°	90°	0°	50°	90°	0°	50°	90°	0°	50°	90°	0°	50°	90°	0°	50°	90°	0°	50°	90°	0°	50°	90°	0°	50°	90°	0°	50°	90°
2,8	240.0	180.0	360.0	274.3	128.6	154.3	360.0	180.0	240.0	402.9	205.7	282.9	510.0	270.0	390.0	660.0	360.0	540.0															
3,5	300.0	225.0	450.0							342.9	160.7	192.9	450.0	225.0	300.0	600.0	315.0	450.0	771.4	417.9	621.4	900.0	495.0	750.0									
4,2	360.0	270.0	540.0										390.0	180.0	210.0	540.0	270.0	360.0	711.4	372.9	531.4	840.0	450.0	660.0	925.7	501.4	745.7	1140	630.0	960.0	1354	758.6	1174
5,6	480.0	360.0	720.0																591.4	282.9	351.4	720.0	360.0	480.0	805.7	411.4	565.7	1020	540.0	780.0	1234	668.6	994.3

Technical Data

Max Pressure	** Min Pressure	Rotation	Stroke Adjustment	Screw Stroke Adjustment	*Moving time (sec.)		Operating temperature (°C)
					Opening	Closing	
8.4 bar	2.4 bar	92° -1° +91°	10°	For 1° drive Need 3/4 turn screw	2.2	2.5	Standard –20°C +80°C High temperature –20°C +150°C Low temperature –50°C +60°C

Weight Kg	Chamber Ø (mm)	Air volume L/cycle	Maximum flange torque values
82.5	145	4.2	F12 = 1000 Nm

	A1	CH1	Weight Kg
Spring return Actuator with spring force 2.8 , is manufactured with only one spring cap and normal end cap (available only in standard version).	630.8	30	77

*The moving time could vary on different operating and installation factors.
****Attention: for "High Temperature" and "Low Temperature" version, the Min Pressure is 3.5 bar.**

Operating Medium
The operating medium shall have a dew point equal to – 20 °C or, to be at least, 10 °C below the ambient temperature (ISO 8573-1, Class 3).
The maximum particle size shall not exceed 40 µm (ISO 8573-1, Class 5).

ACTUATECH S.p.A.
F.lli Capponi, 126/128 25068 Sarezzo (BS) – ITALY Tel. (+39) 0308908142 Fax (+39) 0308908143
http://www.actuatech.com e-mail: actuatech@actuatech.com