ACTUATECH
ACTUATOR TECHNOLOGY

Actuator datasheet

GS30F03F05 INOX

Modification reserved. Rev.date 01.2015.
No guarantee for accuracy.
Older data sheets are invalid

COMPANY WITH MANAGEMENT SYSTEM CERTIFIED BY DNV GL
= ISO 9001 =
= ISO 14001 =

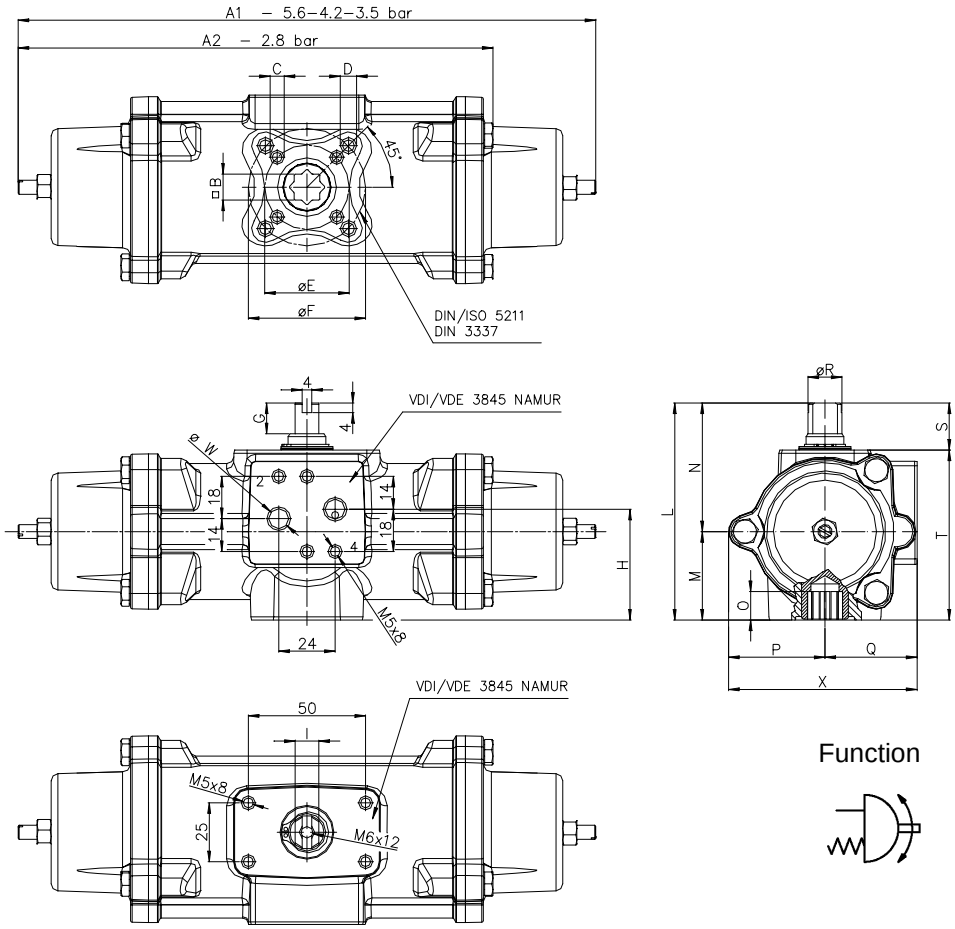

Ref.	Dimensions (mm)
Flange	F03 - F05
C x depth	M5x8
D x depth	M6x10
E	36
F	50
B	11
O	12.1
A1	246.2
G	13
H (bore)	47.2
I	10
L	92.4
M	37.6
N	54.8
P	41.1
Q	39.2
R	14.5
S	20
T	72.4
X	80.3
W	1/8" GAS
Ancillaries Attachment	AA0

Function

Spring return Actuators Normally Closed (N.C.) - Output Torque related to rotation angle , in Nm
(0°valve closed 90° valve open)

Spring Torque				Air pressure supply in bar																																
SIZE	0°	50°	90°	2,4			2,8			3			3,5			4,2			5			5,6			6			7			8		
				0°	50°	90°	0°	50°	90°	0°	50°	90°	0°	50°	90°	0°	50°	90°	0°	50°	90°	0°	50°	90°	0°	50°	90°	0°	50°	90°	0°	50°	90°
2,8	10.0	7.5	15.0	11.4	5.4	6.4	15.0	7.5	10.0	16.8	8.6	11.8	21.3	11.3	16.3	27.5	15.0	22.5															
3,5	12.5	9.4	18.8							14.3	6.7	8.0	18.8	9.4	12.5	25.1	13.2	18.8	32.2	17.5	25.9	37.6	20.7	31.3									
4,2	15.0	11.3	22.5										16.3	7.5	8.8	22.5	11.3	15.0	29.6	15.6	22.1	35.0	18.8	27.5	38.6	21.0	31.1	47.5	26.4	40.0	56.4	31.7	48.9
5,6	20.0	15.0	30.0																24.6	11.8	14.6	30.0	15.0	20.0	33.6	17.1	23.6	42.5	22.5	32.5	51.4	27.9	41.4

Technical Data

Max Pressure	** Min Pressure	Rotation	Stroke Adjustment	Screw Stroke Adjustment	*Moving time (sec.)		Operating temperature (°C)
					Opening	Closing	
8.4 bar	2.4 bar	92° -1° +91°	-	-	0.23	0.27	Standard –20°C +80°C

Weight Kg	Chamber Ø (mm)	Air volume L/cycle	Maximum flange torque values
2.4	50	0.16	F03 = 32 Nm F05 = 125 Nm

	A2	Weight Kg
Spring return Actuator with spring force 2.8 , is manufactured with only one spring cap and normal end cap.	202.3	2.1

*The moving time could vary on different operating and installation factors.

Operating Medium
The operating medium shall have a dew point equal to – 20 °C or, to be at least, 10 °C below the ambient temperature (ISO 8573-1, Class 3).
The maximum particle size shall not exceed 40 µm (ISO 8573-1, Class 5).

ACTUATECH S.p.A.
F.lli Capponi, 126/128 25068 Sarezzo (BS) – ITALY Tel. (+39) 0308908142 Fax (+39) 0308908143
http://www.actuatech.com e-mail: actuatech@actuatech.com