ACTUATECH
ACTUATOR TECHNOLOGY

Actuator datasheet

GS90F07F10

Modification reserved. Rev.date 01.2015.
No guarantee for accuracy.
Older data sheets are invalid

COMPANY WITH MANAGEMENT SYSTEM CERTIFIED BY DNV GL
= ISO 9001 =
= ISO 14001 =

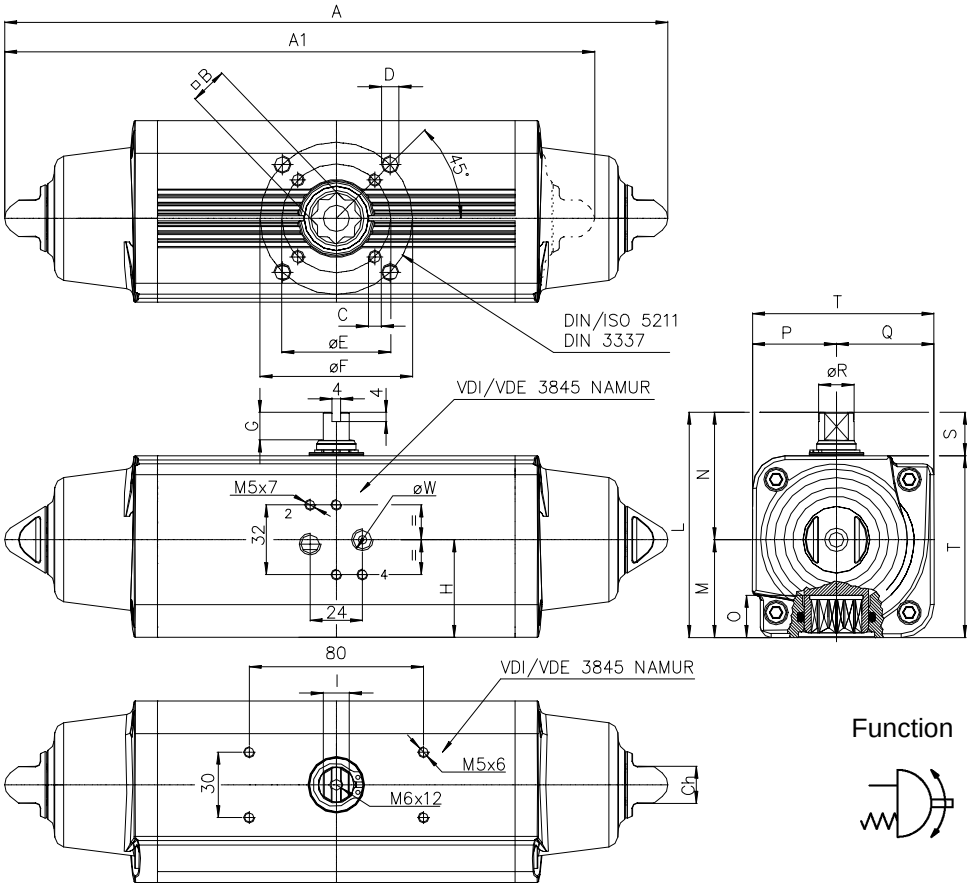

Function

Ref.	Dimensions (mm)
Flange	F07 - F10
C x depth	M8x12
D x depth	M10x15
E	70
F	102
B	22
O	24.8
A	393.7
G	16
H (bore)	56.5
I	15
L	137.5
M	56.5
N	81
P	51
Q	56.5
R	20.2
S	30
T	107.5
W	1/8" GAS
Ch	22
Ancillaries Attachment	AA2

Spring return Actuators Normally Closed (N.C.) - Output Torque related to rotation angle , in Nm
(0°valve closed 90° valve open)

Spring Torque				Air pressure supply in bar																																
				2,4			2,8			3			3,5			4,2			5			5,6			6			7			8		
SIZE	0°	50°	90°	0°	50°	90°	0°	50°	90°	0°	50°	90°	0°	50°	90°	0°	50°	90°	0°	50°	90°	0°	50°	90°	0°	50°	90°	0°	50°	90°	0°	50°	90°
2,8	30,0	22,5	45,0	34,3	16,1	19,3	45,0	22,5	30,0	50,4	25,7	35,4	63,8	33,8	48,8	82,5	45,0	67,5															
3,5	37,5	28,1	56,3							42,9	20,1	24,1	56,3	28,1	37,5	75,1	39,4	56,3	96,5	52,2	77,7	112,6	61,9	93,8									
4,2	45,0	33,9	67,5										48,8	22,6	26,3	67,5	33,9	45,0	88,9	46,8	66,4	105,0	56,5	82,5	115,7	63,0	93,2	142,5	79,1	120,0	169,3	95,2	146,8
5,6	60,0	45,0	90,0																73,9	35,4	43,9	90,0	45,0	60,0	100,7	51,4	70,7	127,5	67,5	97,5	154,3	83,6	124,3

Technical Data

Max Pressure	** Min Pressure	Rotation	Stroke Adjustment	Screw Stroke Adjustment	*Moving time (sec.)		Operating temperature (°C)
					Opening	Closing	
8.4 bar	2.4 bar	92° -1° +91°	10 °	For 1° drive Need 1/3 turn screw	0.6	0.7	Standard –20°C +80°C High temperature –20°C +150°C Low temperature –50°C +60°C

Weight Kg	Chamber Ø (mm)	Air volume L/cycle	Maximum flange torque values
5.9	72	0.55	F07 = 250 Nm F10 = 500 Nm

	A1	Weight Kg
Spring return Actuator with spring force 2.8 , is manufactured with only one spring cap and normal end cap (available only in standard version).	341.8	5

*The moving time could vary on different operating and installation factors.
**Attention: for "High Temperature" and "Low Temperature" version, the Min Pressure is 3.5 bar.

Operating Medium
The operating medium shall have a dew point equal to – 20 °C or, to be at least, 10 °C below the ambient temperature (ISO 8573-1, Class 3).
The maximum particle size shall not exceed 40 µm (ISO 8573-1, Class 5).

ACTUATECH S.p.A.
F.lli Capponi, 126/128 25068 Sarezzo (BS) – ITALY Tel. (+39) 0308908142 Fax (+39) 0308908143
http://www.actuatech.com e-mail: actuatech@actuatech.com